

MIDDLErail

DESCRIPTION

Formidable. The MIDDLErail is a sleek, versatile adjustment module for box spring beds and similar frames. With smooth up/down motion, and programmable memory positions, it delivers maximum flexibility. Choose from wired, wireless, or smartphone app controls. Its low-profile design with integrated electronics keeps the under-bed area clean. Compatible with bed lengths of 190 cm–220 cm and widths of 60 cm–140 cm, the MIDDLErail is a compact, powerful solution for enhanced functionality.

FEATURES

- Clean Design with Integrated Power Supply and Cable Routing
- Head and Foot Adjustment
- 250 kg Load Capacity Static
- 150 kg Load Capacity Dynamic
- Wired, Wireless Remote and App Control
- Mechanical Emergency Lowering
- Free-Fall Design
- Compatible to a High Range of Bed Sizes
- MIDDLErail Consists of 3 Configurable Components

Contact Headquarters
LOGICDATA Electronic & Software Entwicklungs GmbH
Wirtschaftspark 18, 8530 Deutschlandsberg, office@logicdata.net

North America
LOGICDATA North America Inc., 13617 Woodlawn Hills Dr.,
Cedar Springs, MI 49319, USA, support.na@logicdata.net

LOGICDATA
MOTION FOR YOUR LIFE

TECHNICAL DATA

Sizes:

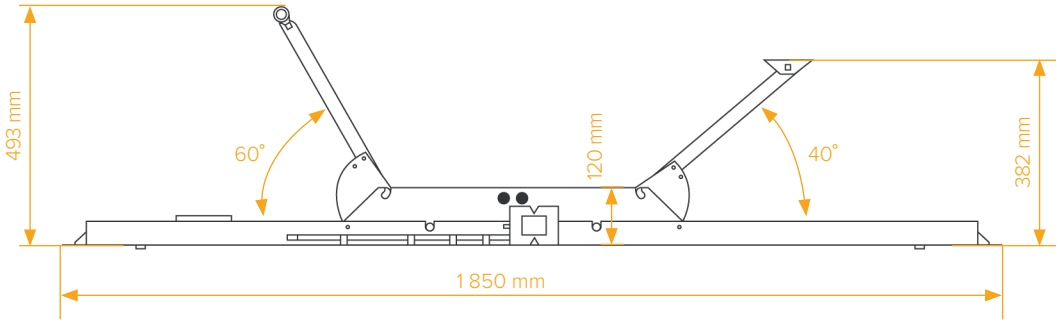

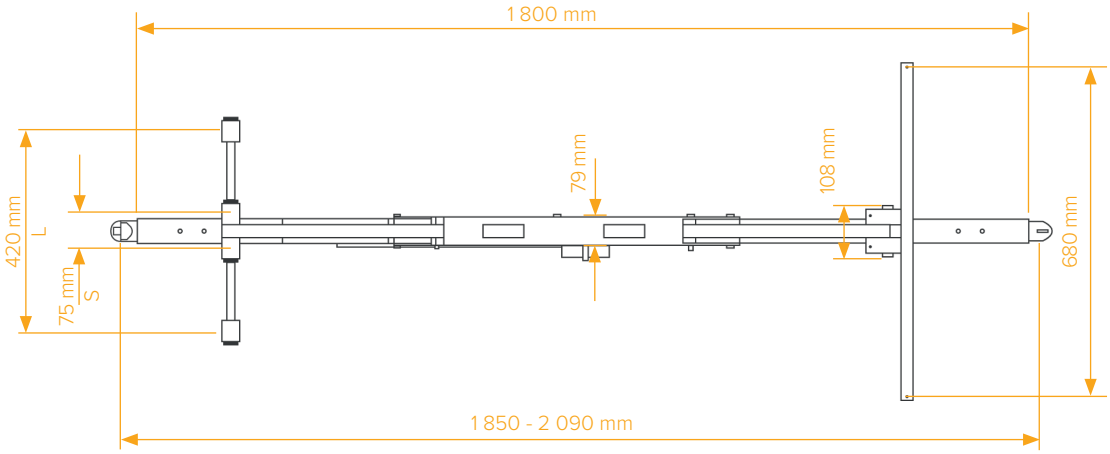

In package:

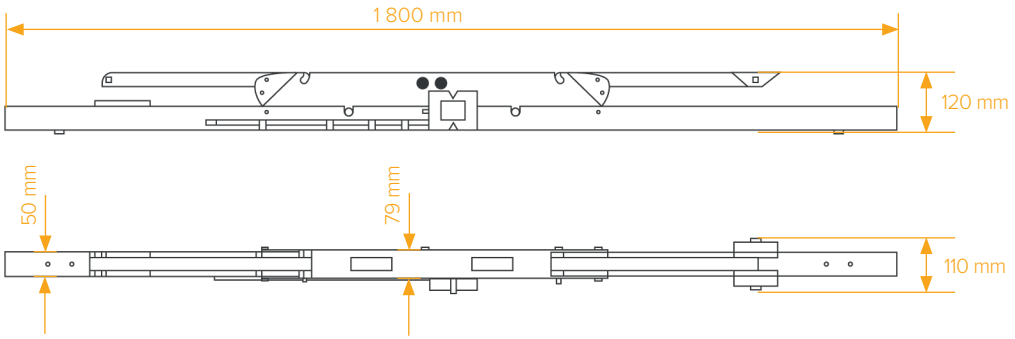

LOGICDATA
MOTION FOR YOUR LIFE

TECHNICAL DATA

Rated Input Voltage / Current	100-240V | 1,6A
Standby Power Consumption	0,4W
Head Up / Foot Up Angle	60° | 40°
Wireless Working Frequency	2,4 GHz
Weight Excl. Packaging	11 kg
Compatible Bed Frame Sizes	Width: ≤140 cm Length: 190-220 cm
Max Load, Evenly Distributed (Excluding Mattress)	Static 250 kg Dynamic 150 kg
Ambient Conditions (Operation)	Temperature between 5 °C and 40 °C. Maximum relative humidity between 95% and 68% (lower allowed)
Ambient Conditions (Transport/Storage)	Temperature between -35 °C and 80 °C. Temperature over 50 °C only for periods not exceeding 72 h. Maximum relative humidity between 95% and 5% (lower allowed)
Compliant Regulations	Radio Equipment Directive (RED) 2014/53/EU | Directive on Machinery (MD) 2006/ 42/EC | Restriction of Hazardous Substances (RoHS) 2011/65/EU
Immunity to ESD Interference (EN 61000-6-2)	Conducted discharge: level 4 | 8 kV Air discharge: level 4 | 15 kV
Order Codes	SFC - MDR - 180 - LDS - EU SFa - bbb - ccc - ddd - eee  *System not available for MIDDLErail* 1. Rail: Base: SFC-MDR-180-LDS-EU 2. User Interface: Cable: SFC-HS-CB-LDS Wireless: SFC-HS-WB-LDS Bluetooth/App: SFC-BT-RJ-LDS 3. Head support: 60-90 cm: SFC-MDR-HDS-LDS-EU 90-140 cm: SFC-MDR-HDL-LDS-EU 3. Synchronization: Sync Cable: SFC-CBL-SYN-LDS

LOGICDATA
MOTION FOR YOUR LIFE