JCB35T3 Control box

Application field - Medical Line& Care Line preferably in the medical and nursing beds.



JCB35T3 is developed as a new product in T series for the care and rehab industry. Powered by adaptor, it abides by the safety principle of "isolation of strong and weak electricity".
Compact structure, elegant design, well-designed cable management as well multiple safety factors, all features make JCB35T3 a preferable choice for care applications.
JCB35T3 outputs for max. 4 channels for actuators, 1 port for hand control as well dry cells for emergency.
JCB35T3 cut off the motor power directly through the signal switch rather than the power switch from the motor itself. This is a good way to prolong the products service life.

General Features

Power:	Input 24-36V DC (matching with power adaptor)
Power Indicator:	Yes
Actuator Port:	1-4channels,6 Pin Mini-Fit elbow connector
Hand Control Port:	1 port; 10 Pin RJ elbow connector
Standby Power Consumption:	Max. 1w (230v)
Colour:	Gray
Control Concept:	H-bridge, the service life exceeds 20000cycles (No relay noise)
Duty Cycle:	10%, max. continuous work for 2min. and 18 min. Off (continuous working for 120 seconds with 180w at 25°C)
Weight:	0.8kg
Compatibility:	Actuators with signal switches
Built-in Dry Cells:	Emergent lowering of backrest and footrest
Protection Class:	Max. IPX6
Maximum Current:	Total 10A for all channels
Safety Protection:	SMPS overheat protection / overheat protection
Installation:	By screws on slide-on brackets/ by special mounting brackets to several actuators
Pull-out Protection:	Yes
Approval:	IEC60601-1 edition 3.1 | EMC IEC60601-1-2 AN SI/AAM ES60601-1:2005/(R)2012 | CSA CAN/CSA-C22.2 NO. 60601-1:14

Usage

Operating Temperature:	+5 °C to +40°C
Storage Temperature:	-10°C to +50°C
Relative Humidity:	20% to 80%, non-condensing
Atmospheric Pressure:	700 to 1060 hPa
Altitude:	Max. 3000m

Dimensions

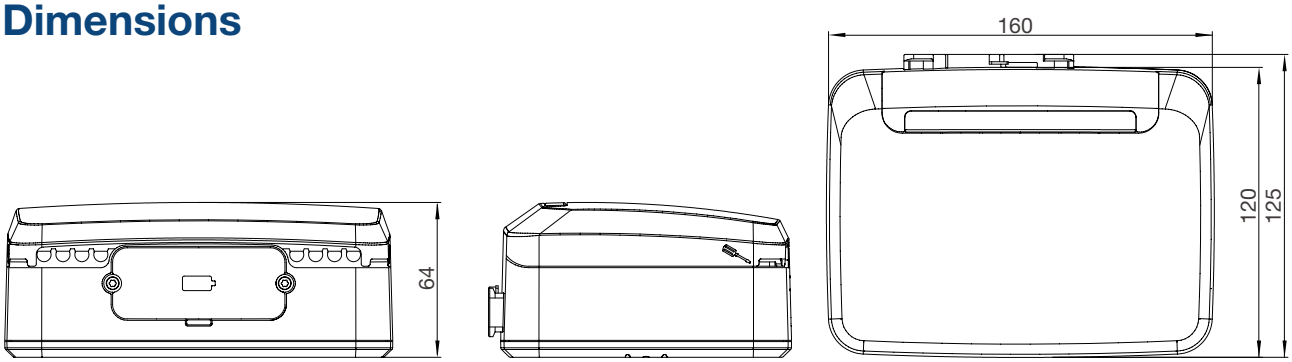

Ordering Key

Take **JCB35T3A46GT0070720819** as an example

Model	**JCB35T3**	
Extension features	**X**	A = with battery function / M = with microchip
Actuator channel	**X**	1 = 1 Channel / 2 = 2 Channels / 3 = 3 Channels / 4 = 4 Channels
Input voltage	**X**	6 = 30 to 42 VDC (including 42v)
Colour	**X**	G = Gray
PCB code	**XX**	T0070 = specific code
Rated power	**XX**	72 = 72W
Optional features	**XX**	0 = standard /08 = with under-bed light / 19 = with dry cells

Diagram-system overview

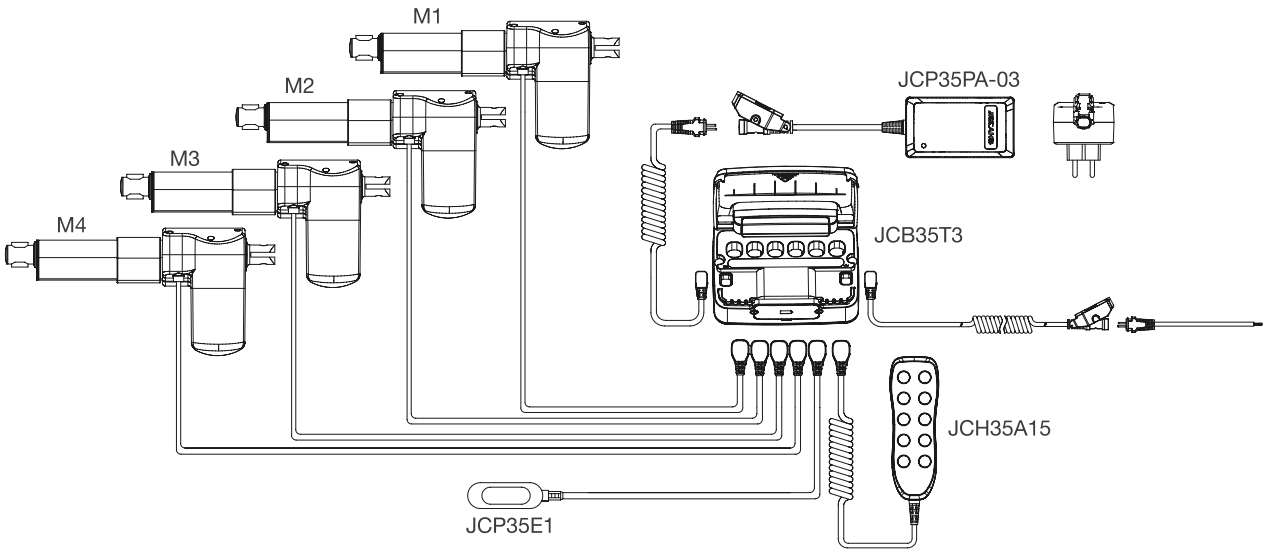

Installation

Mounting brackets

With JC35L3/JC35L9

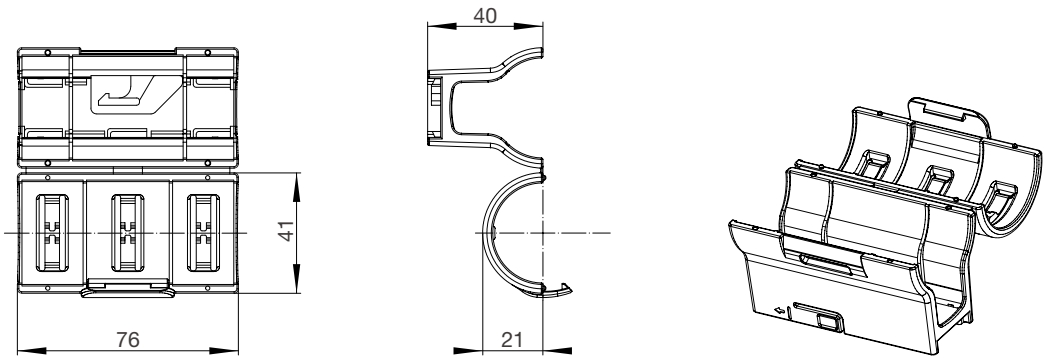

With JC35D4

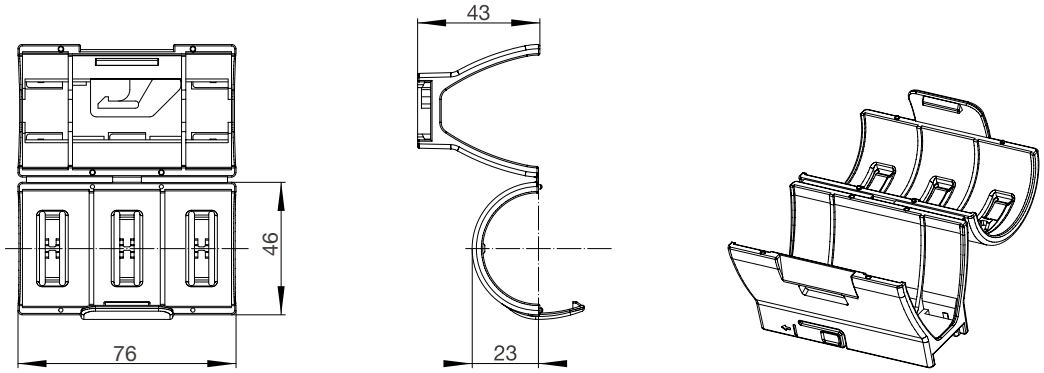

Dimensions of JCB35T3 with linear actuators

Installing with actuator JC35B8

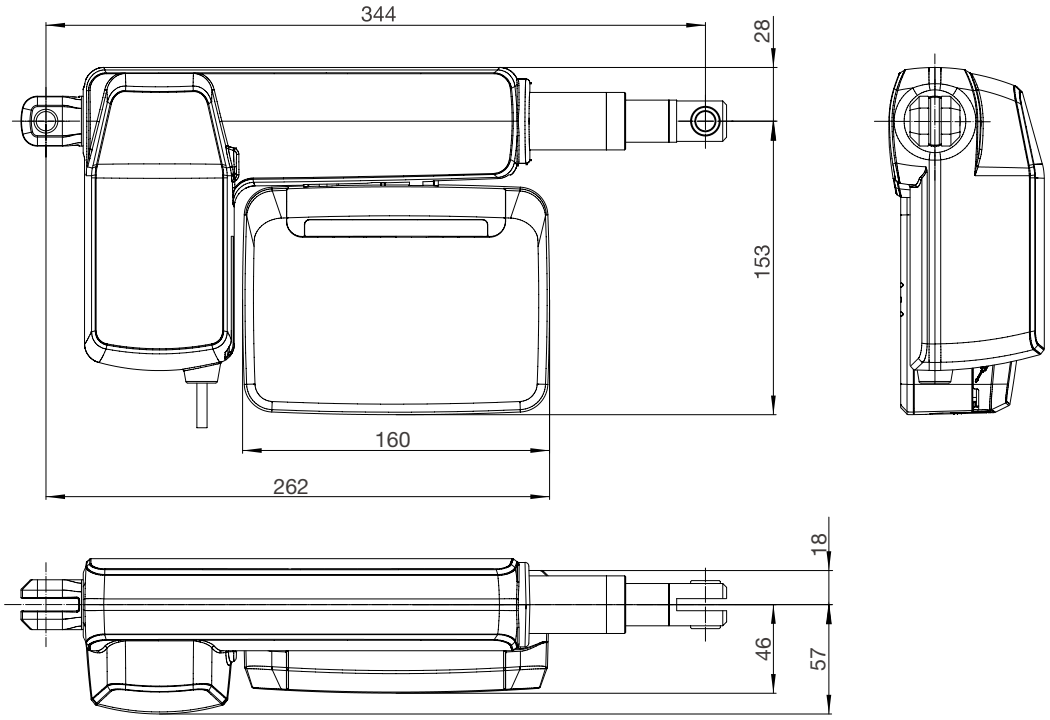

Installing with actuator JC35D4

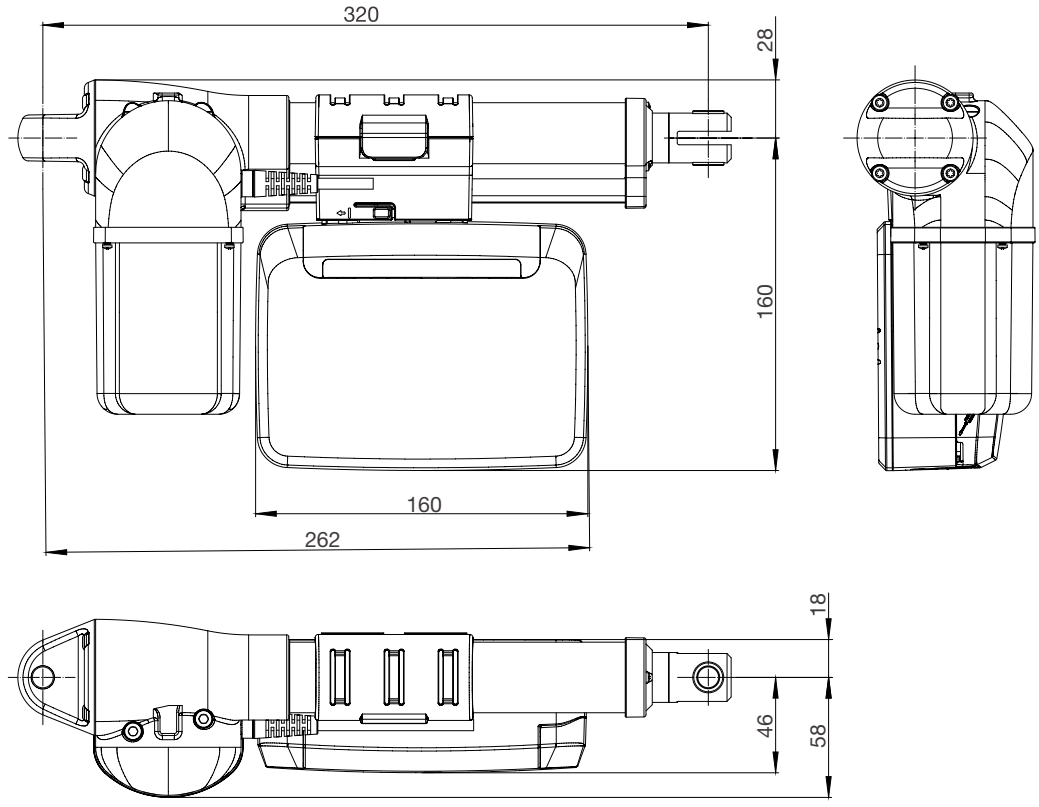

Installing with actuator JC35L3

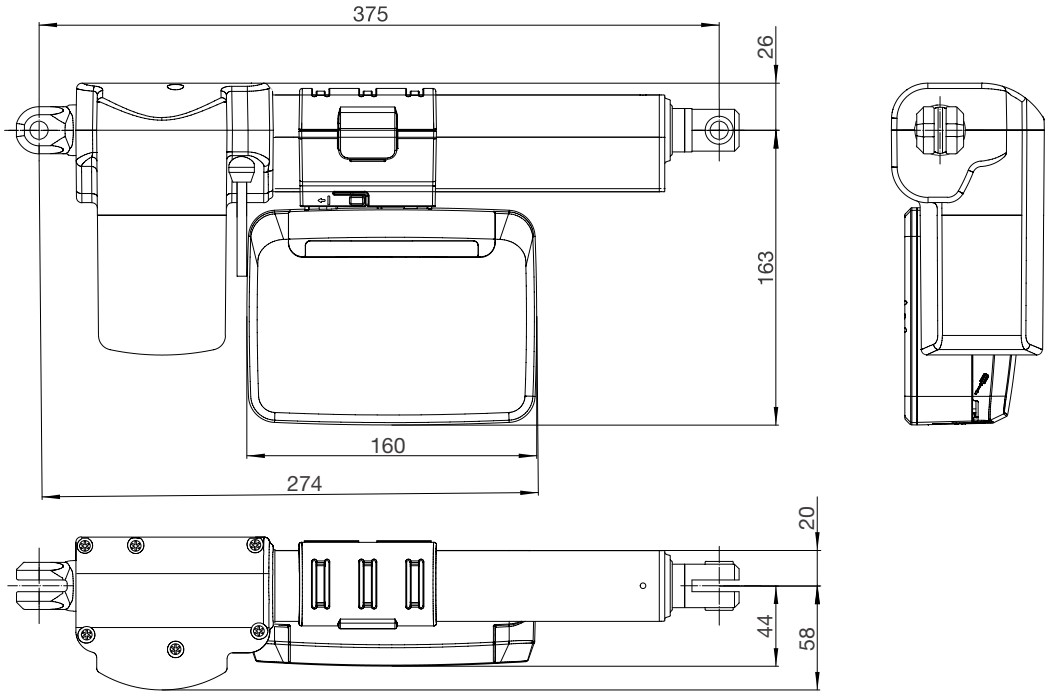

Installing with actuator JC35L9

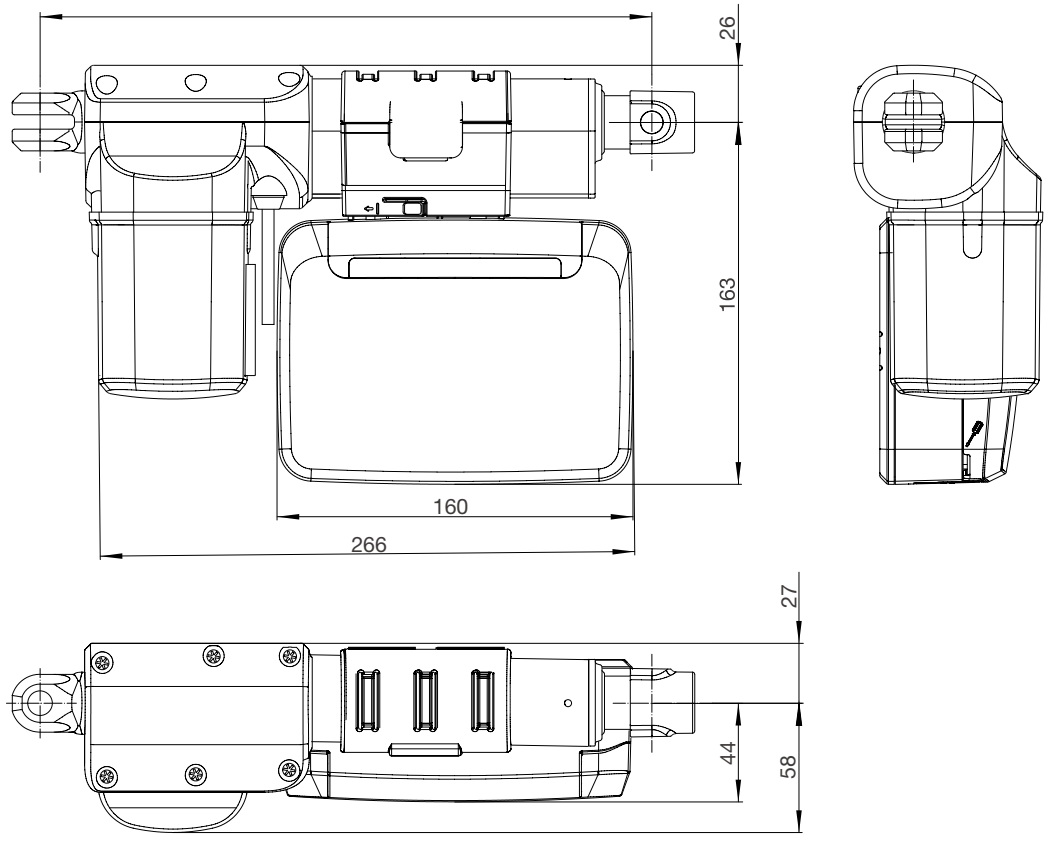

Installation dimension

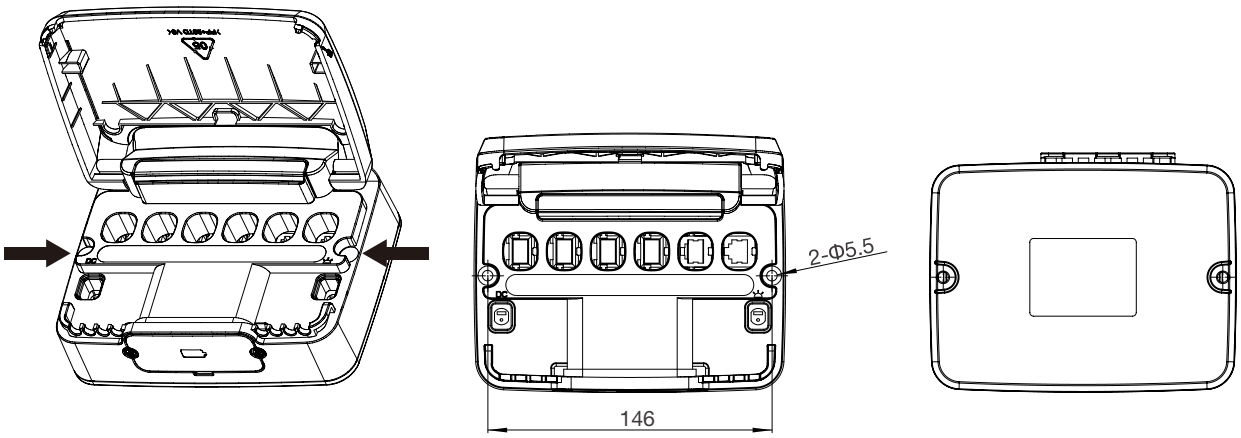

Installing JCB35T3 to the frame

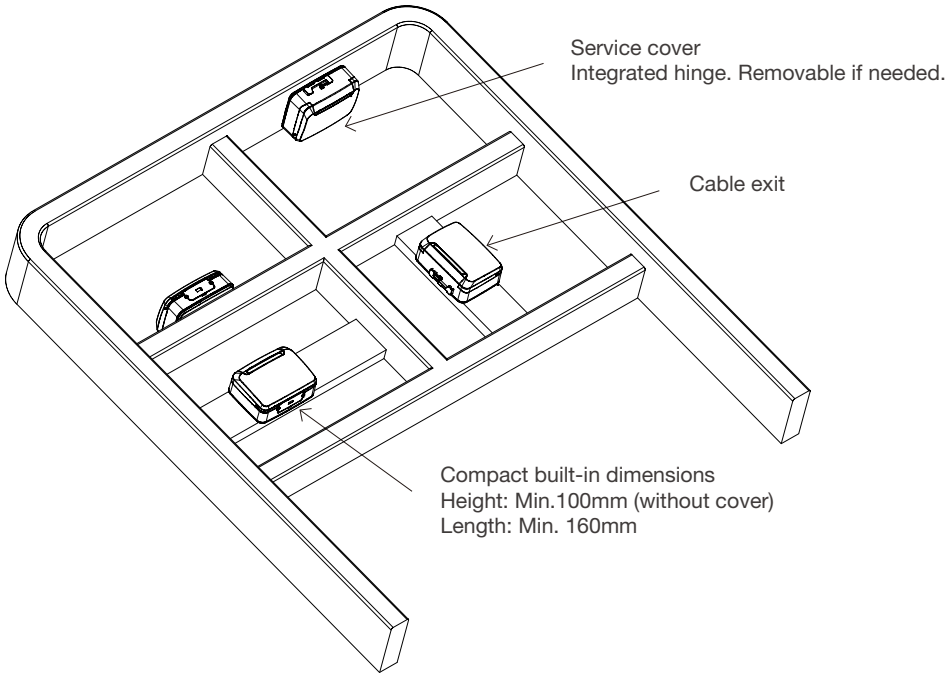

It is recommended to install the JCB35T3 where the water can be drained.
Suggested screw installation torque: 0.6Nm +/-0.1
JCB35T3 can be installed to the bed frame or any other applications according to one of the following installation instructions:
1) M5 screw+ M5 screw nut. Place M5 screw nut on the screw holes on the slide-on bracket, and fix it with M5 screws.
2) Fix the slide-on bracket with M5 screws + flat washer+ screw nut.
3) Fix the slide-on bracket to the frame with tapping screws.

Pull-out Protection and Cable Management

Linear actuator cable locking

JCB35T3 has a uniquely designed cable cover. When it is closed, it acts as an integrated actuator lock.
1. Connect the actuator with the control box
2. Close the cable cover until it snaps into place.(please refer to the below illustration)
To facilitate the maintenance, the cover can stay in a fixed position when it is fully opened.

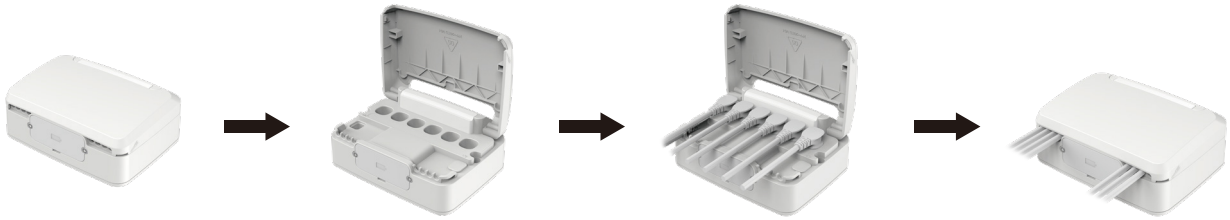

LED indication

JCB35T3 has a green LED power indicator.
When JCB35T3 is successfully connected to the power, the LED indicator is on(green).



Dry cells function and installation steps

JCB35T3 is equipped with 2pcs of dry cells of 9V. It can offer power for emergent lowering of backrest and footrest.
The installation steps of dry cells are as follows:
1.Use a tooling to take out the battery cover screws and remove the battery cover
2. Load two 9V dry batteries inside, please note the positive and negative poles of the dry batteries should correspond to the “+” and “-” symbols on the housing
3. Screw in the battery cover with recommended torque in 0.2Nm

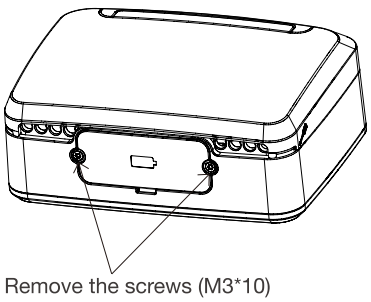

Remove the screws (M3*10)

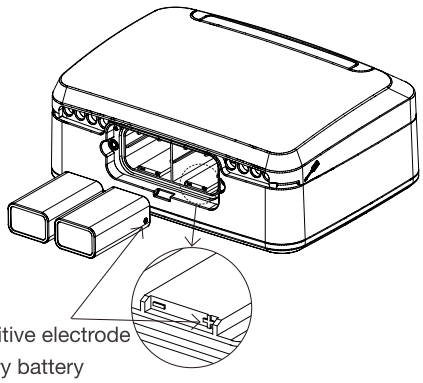

The positive electrode of the dry battery should correspond to the “+” symbol on the housing

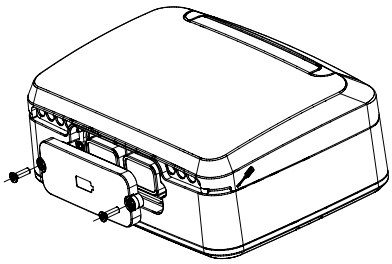

Strictly abiding by medical safety certifications

Passed EMC tests. To ensure our products pass all kinds of tests domestic or abroad.

Communication protocol development

Aiming at different applications, develop more extensive functions for control system.

Professional customization

Powerful R&D strength, fully satisfy customers' needs. Development cycle is about 10 days, seizing more market opportunities

Intelligent Control of Bluetooth

Mobile phone as the remote, applying in home care. Market pioneer, Jiecang provides better choices

Wireless Communication

Controllers adopt high-frequency wireless system. It can avoid interference mixing with signal receivers, assisting in remote control over medical equipment.

Latest Weighing System

Designed for physiotherapy beds and medical care beds. Cantilever carrying weighing sensor, it is applicable to different bedsteads dispensing with any adjustment

Disclaimer and Exclusion of Liability

The user must determine the suitability of JIECANG products under specific conditions. JIECANG is committed to providing the latest product information. However, as JIECANG's product are constantly improving, it is possible to make changes to JIECANG's product without prior notice. Therefore, JIECANG cannot guarantee the correctness and authenticity of the product information. Although JIECANG will do its best to meet the order requirements, due to the above reasons, JIECANG cannot guarantee the delivery capacity of any specific product.

Therefore, JIECANG reserves the right to stop selling any products listed on the website or product catalog or other JIECANG written materials. All sales activities must be carried out in accordance with the requirements of JIECANG sales and Delivery Standard Clauses. For copies of relevant documents, please contact JIECANG.

Notes for mounting and usage can be found in the corresponding mounting manual

TECHNOLOGY
DRIVES INTELLIGENT LIFE