JC35EN2 Lifting Column



EN2 is a telescopic aluminum lifting column specifically designed for high static bending moment requirements. It integrates a Jiecang 24VDC linear actuator, engineered to provide vertical lifting (push only) in applications where both bending moment and torque may occur simultaneously.
The EN2 series includes three models:
EN2-A(Small column)
EN2-B (Medium column)
EN2-C (Large column)
Each column is fitted with machined steel plates at both ends, each plate featuring four threaded holes for secure mounting. The surface is anodized for durability and wear resistance, operates with very low noise, and features a sleek, compact design. Standard protection class: IP43.

Features And Options

Output Voltage:	24V
Dynamic Load Push:	EN2-A, EN2-B — 4000N EN2-C — 6000N
Stroke Length:	2000N: 600mm 4000N: 400mm 6000N: 300mm
Installation Dimensions:	L=S/2+150mm (0≤S≤400mm) L=S/2+200mm (S>400mm)
No-load Current:	≤2A
Rated Load Current:	≤6A
No-load Speed:	20mm/s
Rated Load Speed:	15mm/s
Noise Level:	≤50dB (ambient noise ≤40dB)

Usage

Duty Cycle:	10%, max. continuous work for 2min. and 18 min. off
Operating Temperature:	+5°C to +40°C
Reserve Temperature:	-10°C to +50°C
Supporting Control Box:	Matching with JIECANG control box
Relative Humidity:	Under 30°C, 20% to 90%, non-condensing
Atmospheric Pressure:	700 to1060hPa

Technical Data-Standard value

Input voltage (VDC)	Spindle pitch (mm)	Max. load in push (N)	Mechanical self-lock (N)	Speed at no load/full load (mm/s)	Current at full load (A)	Note
24	20	1000	≥1000	20/15	≤5	A/B
24	16	1500	≥1500	16/12	≤6	A/B
24	12	2000	≥2000	12/10	≤6	A/B
24	7.5	3000	≥3000	7.5/5	≤6	A/B
24	5	4000	≥4000	5/4	≤6	A/B
24	7.5	1500	≥1500	20/13	≤4.5	C
24	5	2000	≥2000	13/9	≤4.5	C
24	5	2000	≥2000	22/18	≤8	C
24	5	4000	≥4000	6/4	≤4.5	C
24	7.5	4000	≥4000	9.5/5	≤4.5	C
24	4	6000	≥6000	5/3	≤6	C

Remarks: It can achieve better self-locking ability with Jiecang control box;
The above data is the standard value of the test data (inspection specification) at room temperature of 25°C.
1kg=2.2lb,100mm=3.94inch

Dimensions

JC35EN2-A

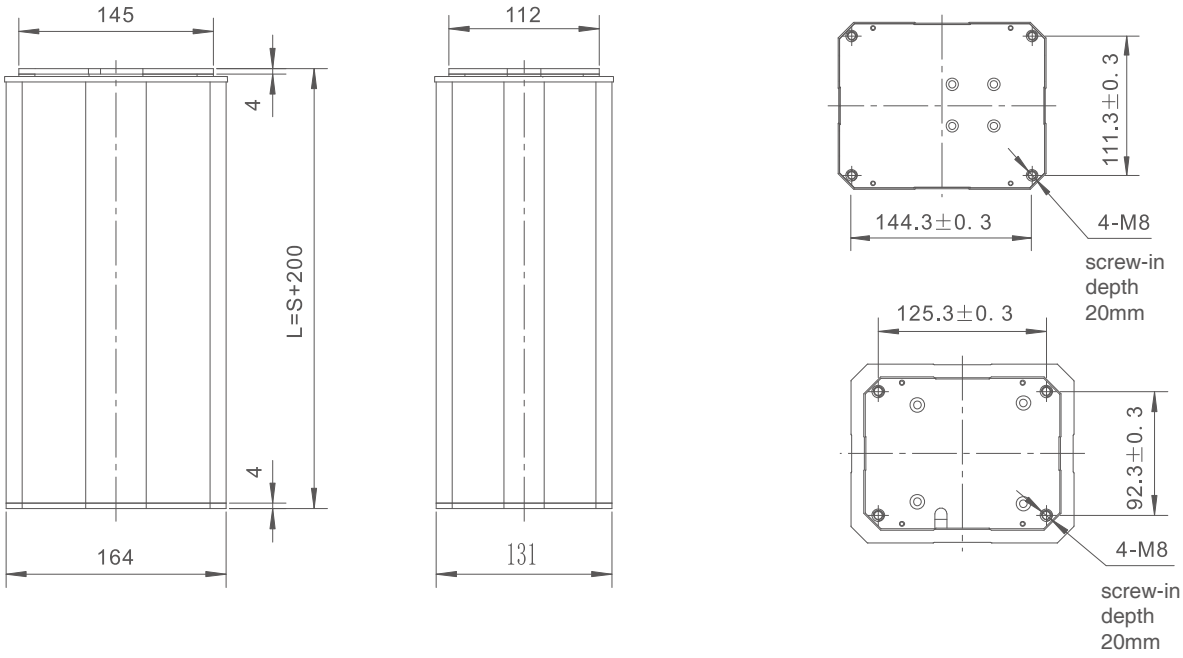

JC35EN2-B

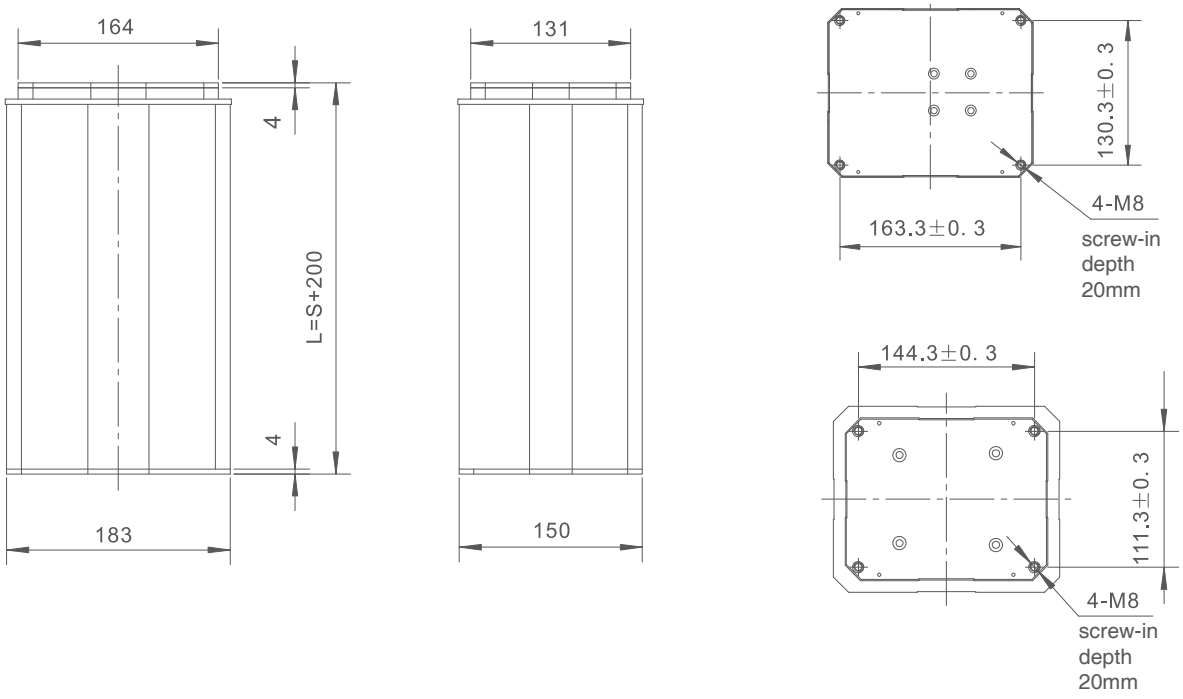

JC35EN2-C

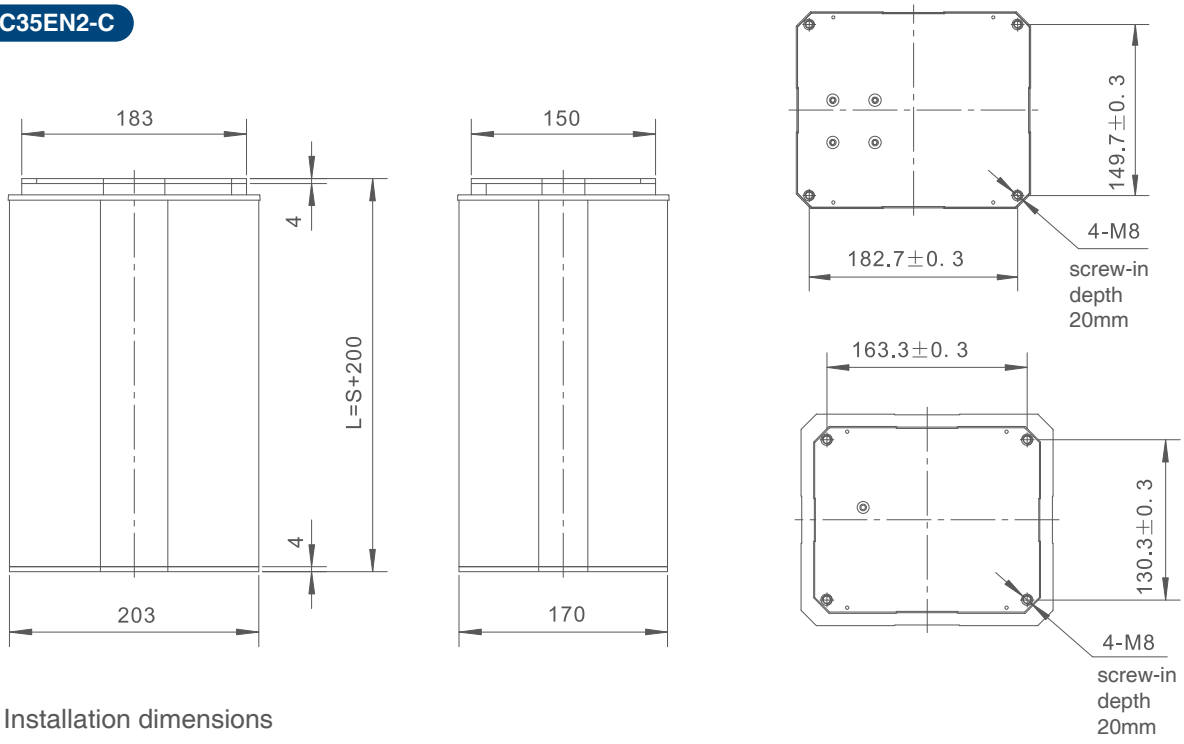

Installation dimensions

L=S+200（S<400）

L=S+220（400≤S≤600）

Ordering Example

Take **JC35EN2YC2424200/40001101D507G** for example

Model	**JC35EN2**	
Optional features	**X**	0 = Standard Y=Hall sensor
Profile code	**X**	A=EN2-A / B=EN2-B / C=EN2-C
Load in push	**X**	4=4000N
Speed at full load	**X**	4=4mm/s
Input voltage	**XX**	24=24VDC
Stroke length/ Installation dimensions	**XXX/XXX**	Stroke length=XXX Installation dimensions =XXX
Mounting plate code	**X**	0=Standard
Cable outlet	**X**	1=Top cable outlet
Type of connector and cable	**XX**	10=5 Pin Din connector
Cable length	**XXX**	1D5=1.5m
Surface treatment	**XX**	07=anodized treatment
Color	**X**	G = Silver Gray

Diagram of relationship between stroke length and load

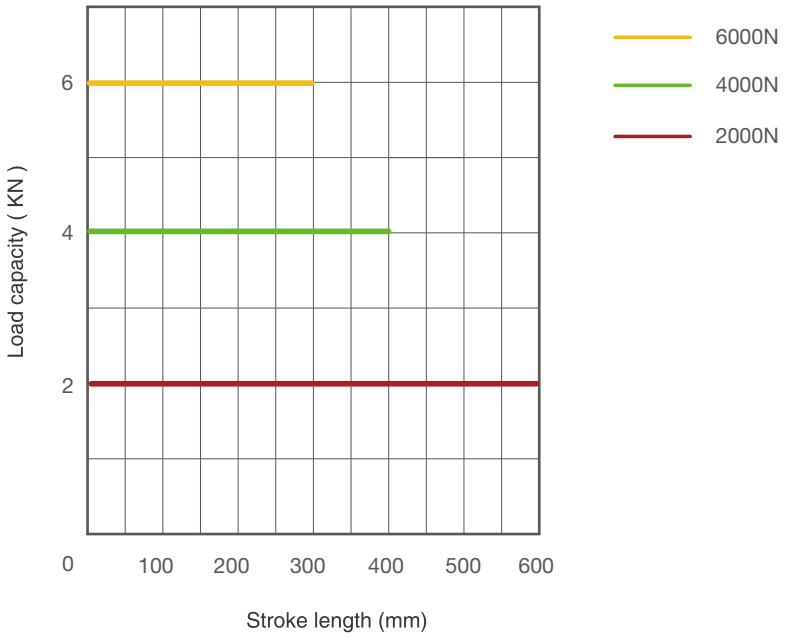

Characteristic Curve

JC35EN2-A-B

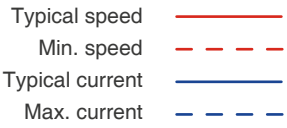

1000N

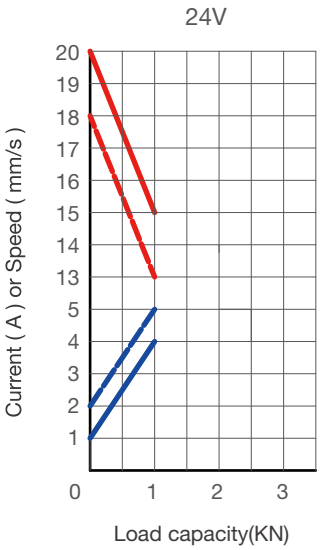

1500N

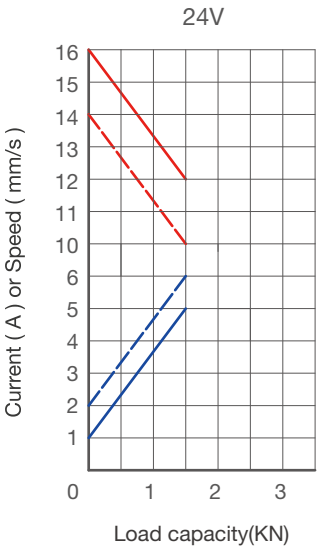

2000N

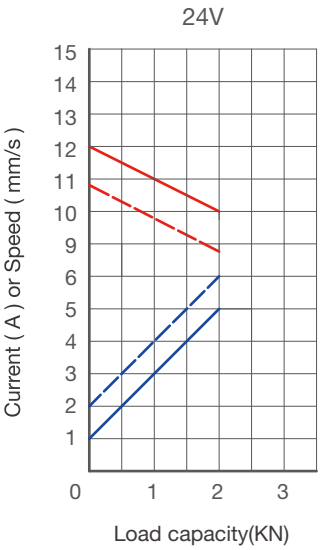

JC35EN2-A-B

Typical speed
Min. speed
Typical current
Max. current

3000N

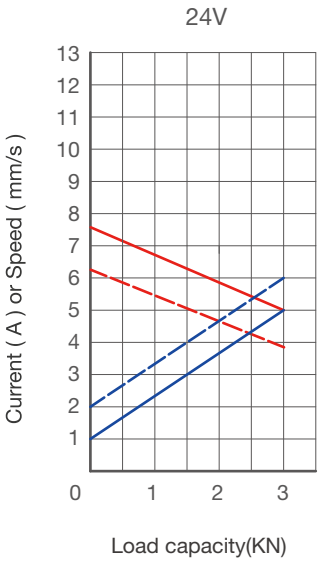

4000N

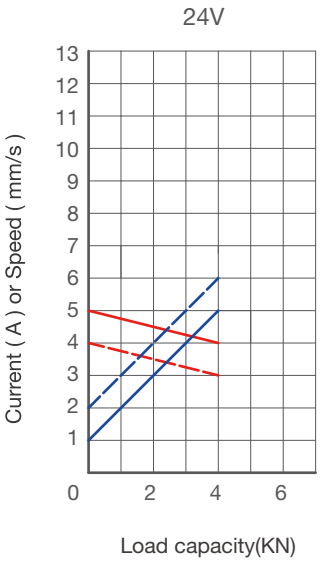

JC35EN2-C

1500N

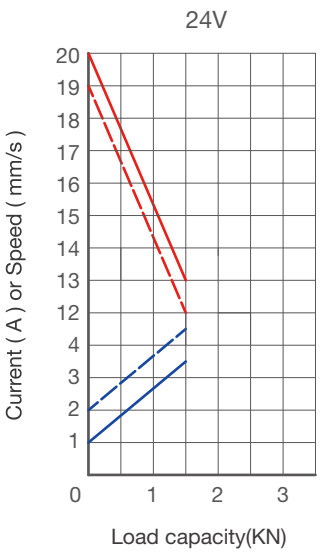

2000N

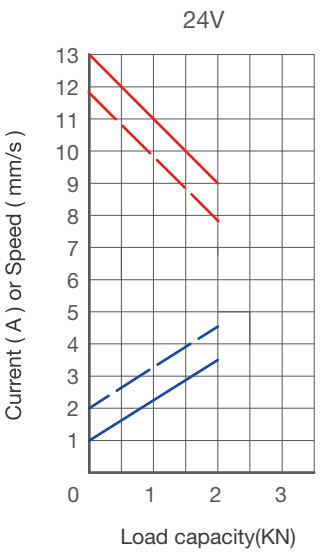

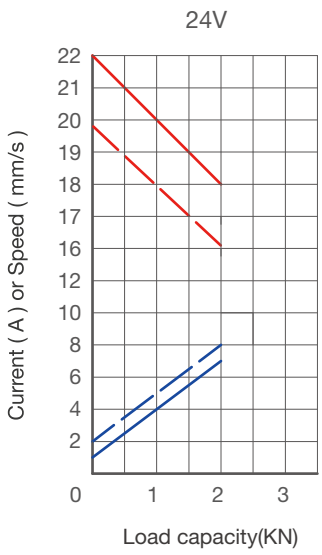

JC35EN2-C

典型速度
最小速度
典型电流
最大电流

4000N

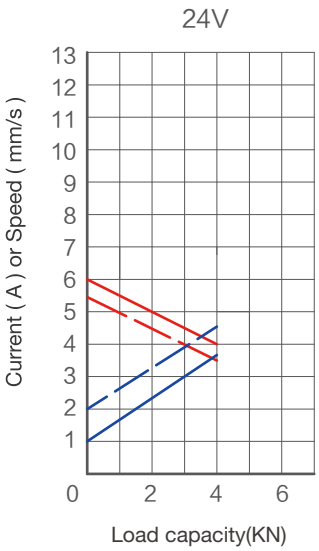

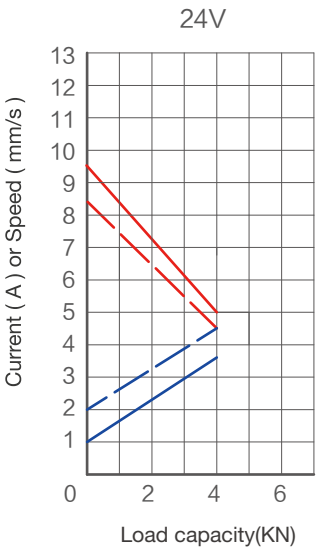

6000N

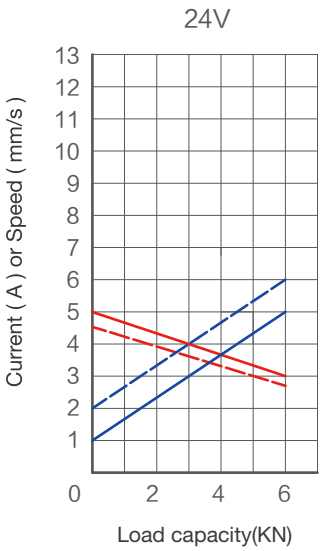

Ordering Details

5 pin DIN plug

Supporting control boxes:
JCB35Q / JCB35T / JCB35R /
JCB35R1 / JCB35S

Pin	Color	Functions
1	Red	5V
2	Brown	power with positive voltage, actuator going down
3	Black	GND
4	Blue	power with positive voltage, actuator going up
5	Yellow	Hall sensor signal 1
Outer Circle	Orange	Hall sensor signal 2



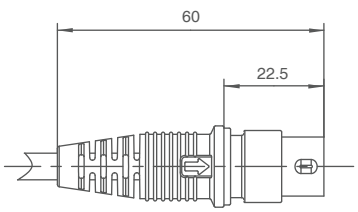

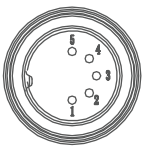

Strictly abiding by medical safety certifications

Passed EMC tests. To ensure our products pass all kinds of tests domestic or abroad.

Communication protocol development

Aiming at different applications, develop more extensive functions for control system.

Professional customization

Powerful R&D strength, fully satisfy customers' needs. Development cycle is about 10 days, seizing more market opportunities

Intelligent Control of Bluetooth

Mobile phone as the remote, applying in home care. Market pioneer, Jiecang provides better choices

Wireless Communication

Controllers adopt high-frequency wireless system. It can avoid interference mixing with signal receivers, assisting in remote control over medical equipment.

Latest Weighing System

Designed for physiotherapy beds and medical care beds. Cantilever carrying weighing sensor, it is applicable to different bedsteads dispensing with any adjustment

Disclaimer and Exclusion of Liability

The user must determine the suitability of JIECANG products under specific conditions. JIECANG is committed to providing the latest product information. However, as JIECANG's product are constantly improving, it is possible to make changes to JIECANG's product without prior notice. Therefore, JIECANG cannot guarantee the correctness and authenticity of the product information. Although JIECANG will do its best to meet the order requirements, due to the above reasons, JIECANG cannot guarantee the delivery capacity of any specific product.

Therefore, JIECANG reserves the right to stop selling any products listed on the website or product catalog or other JIECANG written materials. All sales activities must be carried out in accordance with the requirements of JIECANG sales and Delivery Standard Clauses. For copies of relevant documents, please contact JIECANG.

Notes for mounting and usage can be found in the corresponding mounting manual