JCHR35F Remote Control

Application field - Medical Line
Preferably in in the medical and nursing industries

JCHR35F is specially designed for wireless remote control, using 2.4G wireless control technology, strong anti-interference to ensure good communication within 5m, the product will enter a low power consumption state after 3 seconds of no operation, elegant appearance and comfortable hand grip, it is functional and technological fashion Feel perfect.



General Features

Number of buttons:	Up to 6 silicone buttons can be designed
Color:	White
Supporting control box:	JCB35Q
Communication range:	5m
Operating temperature:	+5˚C +40˚C
Reserve Temperature:	-10˚C to +50˚C
Relative humidity:	20% to 80% (non-condensing)
Atmospheric pressure:	860 to1060 hPa
Altitude:	Up to 2000m
Others:	Drive up to 3 actuators simultaneously; Using 2.4G wireless control; The three-button and six-button programs are common, and the combined button functions can be customized; Screen printing pattern can be customized; 3s no operation to enter low power consumption state.

Dimension Drawing

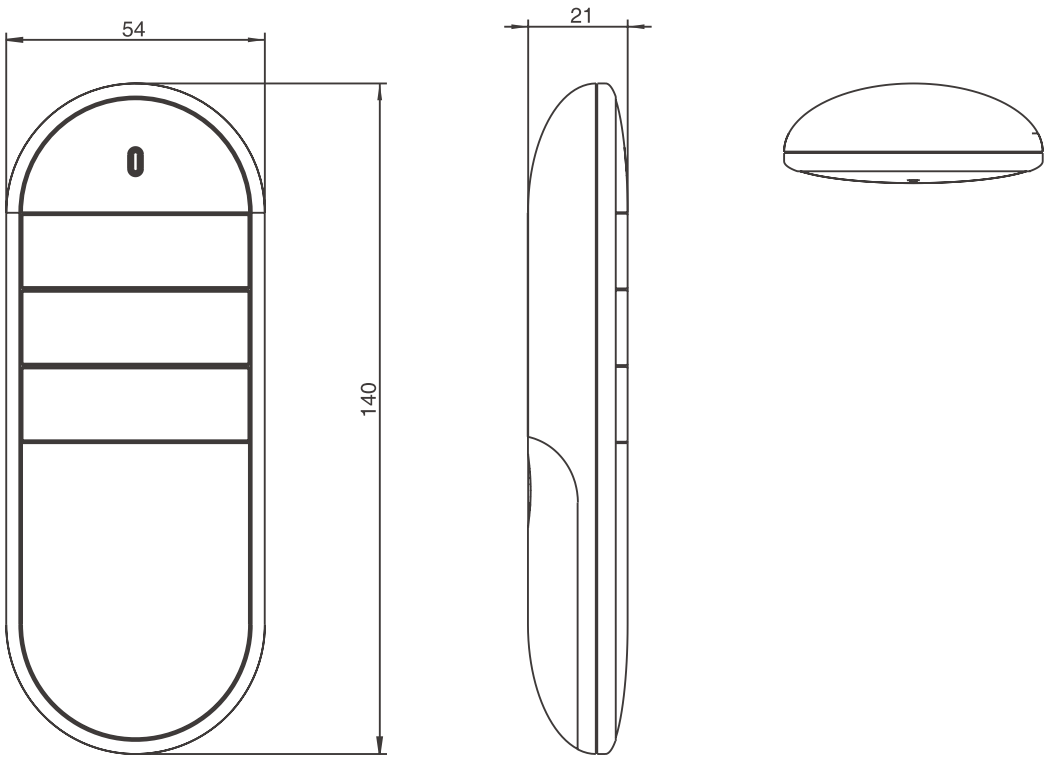

Ordering Key

Take **JCHR35FW0130R2.4G** for example

Model	**JCHR35F**	JCHR35F Remote Control
Color	**W**	W = White
Panel code	**013**	013 = Panel code
Certification number	**0**	0 = Standard
The transmitter emission frequency type	**R**	F = Infrared / B = Bluetooth / R = wireless
Frequency code	**2.4G**	2.4G = 2.4GHz

Button function indication:

The JCHR35F remote control uses 2.4G wireless control, and will enter a low power consumption state after 3 seconds of no operation.

The key functions are as follows:

1.Three buttons on the left, operate single actuator action.

2.The six buttons on the right can operate three actuator.

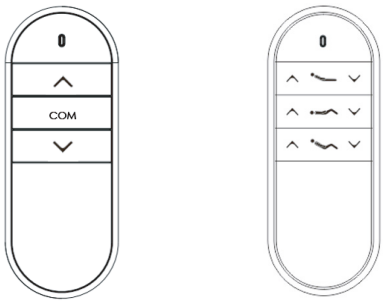

1. Combination of three buttons S1+S3 to learn, the learning success indicator area flashes three times.
2. Six buttons, two buttons in the first row are pressed at the same time to learn.

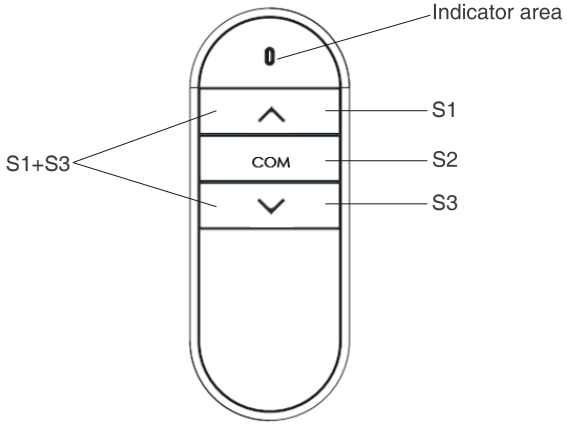

Disclaimer and Exclusion of Liability

The user must determine the suitability of JIECANG products under specific conditions. JIECANG is committed to providing accurate latest product information. However, due to JC's continuous improvement of its products, JC's products may not be notified in advance with frequently changes. Therefore, JIECANG cannot guarantee the correctness and authenticity of the product information. Although JIECANG will do our best to meet the order requirements, for the above reasons, JIECANG cannot guarantee the delivery ability of any specific product. Therefore, JIECANG reserves the right to stop selling any products listed on the website or product catalog or other JIECANG written materials. All sales activities must be carried out in accordance with the requirements of the JIECANG Sales and Delivery Standard Terms. For copies of related documents, please contact JIECANG.

Strictly abiding by medical safety certifications

Passed EMC tests. To ensure our products pass all kinds of tests domestic or abroad.

Communication protocol development

Aiming at different applications, develop more extensive functions for control system.

Professional customization

Powerful R&D strength, fully satisfy customers' needs. Development cycle is about 10 days, seizing more market opportunities

Intelligent Control of Bluetooth

Mobile phone as the remote, applying in home care. Market pioneer, Jiecang provides better choices

Wireless Communication

Controllers adopt high-frequency wireless system. It can avoid interference mixing with signal receivers, assisting in remote control over medical equipment.

Latest Weighing System

Designed for physiotherapy beds and medical care beds. Cantilever carrying weighing sensor, it is applicable to different bedsteads dispensing with any adjustment

Notes for mounting and usage can be found in the corresponding mounting manual

TECHNOLOGY
DRIVES INTELLIGENT LIFE